#	Part Number	Component	Install Number	Qua
A	TF36RS	Base-36-SM (Tree Fort)	TF24S	1
B	TP36S	Base-36-SM (Tree Post)	TP24S	1
C	FA4000S	Log Transfer Platform-3'-SM	FA4000S	1
D	FA4303	Arch Bridge	FA4303	1
E	FA4500	Wood Plank Enclosure	FA4500	1
F	FA4701S	Stream Slide-3'-SM	FA4701S	1
G	FA4900	Clubhouse Roof (Tree Fort)	FA4900	1
H	FA5103S	Ladder Climber-3'-SM	FA5103S	1
I	FA5117S	Oak Slice-3'-SM	FA5117S	1
J	FA5119S	Tree Stump Climber-3'-SM	FA5115S	1
K	VA3002	2-12 Age Plaque	Installed	1
L	FA4505L	Enclosure-15"-Left Hand	FA4505	3
M	FA4505R	Enclosure-15"-Right Hand	FA4505	3

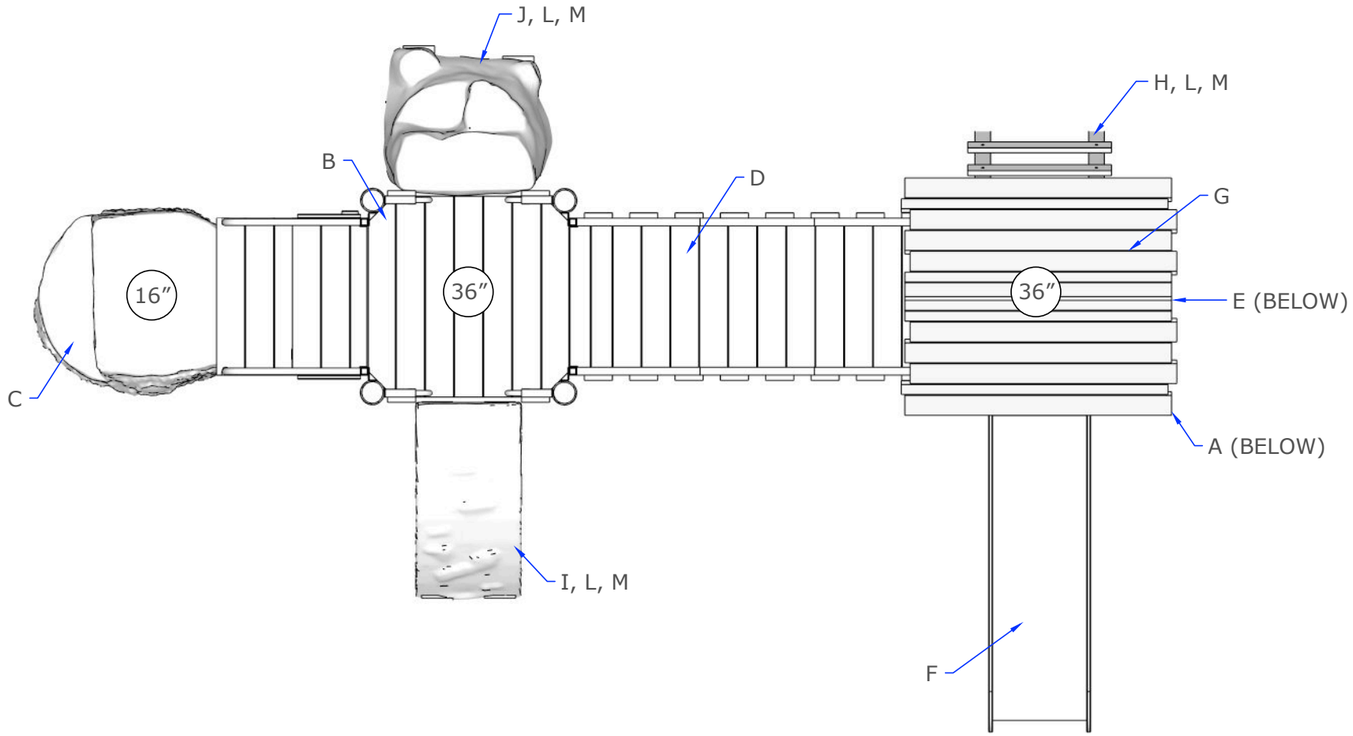





All images and concepts are Copyright © 2025, Cre8Play, LLC - All rights reserved. Drawings are not to scale unless otherwise specified.

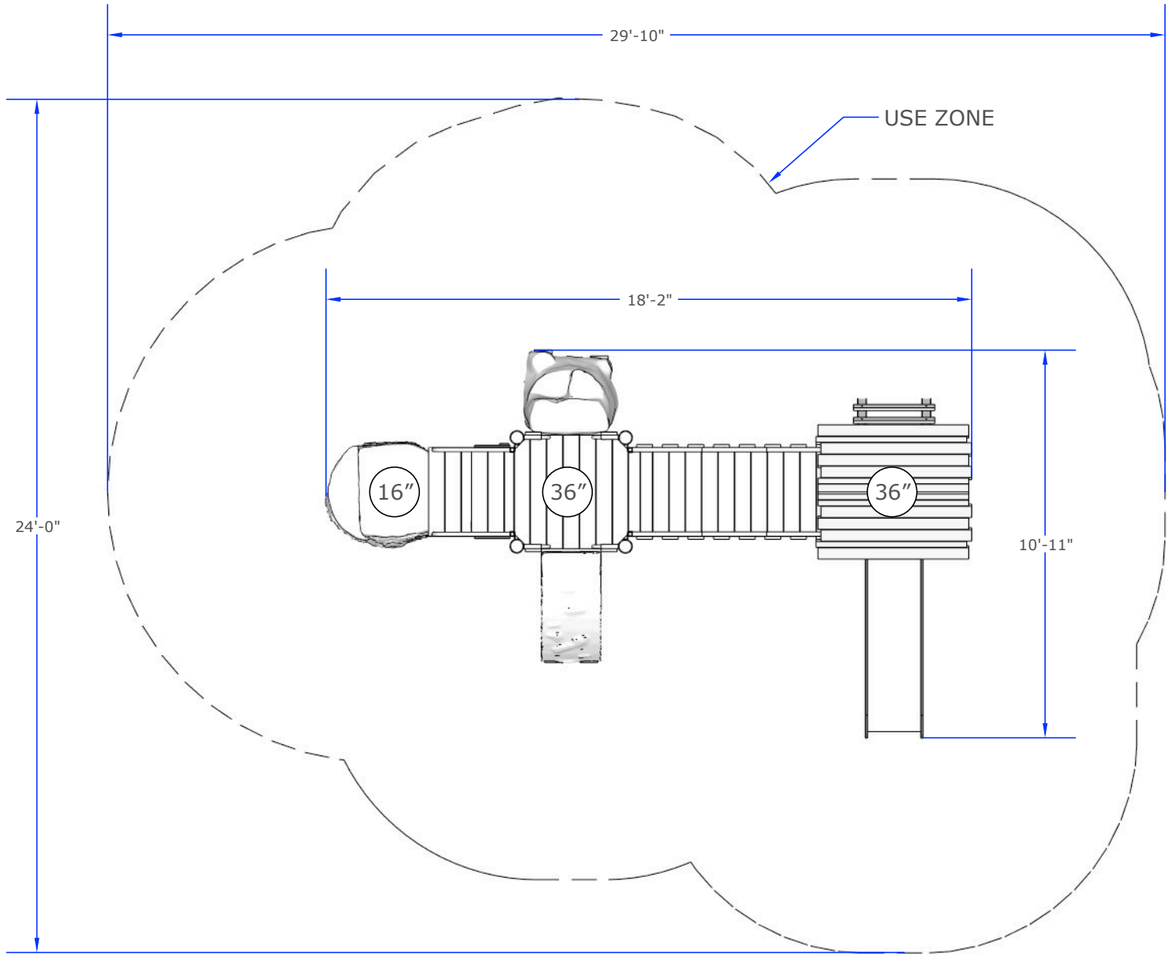

A/2 80001S-PREMIER
PLAN VIEW

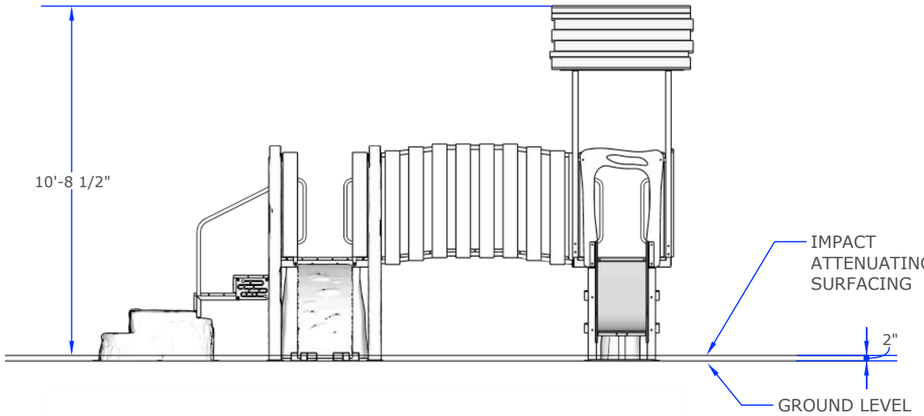

B/2 80001S-PREMIER
ELEVATION

Installation Notes:
1- Paved surfaces, such as asphalt and concrete, are NOT acceptable for use under your structure.
2- It is the consumer's responsibility to check with local utilities prior to excavating footings for any underground utility lines that may exist within the installation area.
3- It is the consumer's responsibility to check local soil conditions and drainage within the site area. Inquire with local contractors for appropriate recommendations.
4- Assemble the entire structure BEFORE anchoring to concrete unless instructed in the individual component installation instructions.
5- Read the installation instructions provided prior to beginning construction.
6- The complete area under and around your play structure must be covered with impact attenuating material.

All images and concepts are Copyright © 2025, Cre8Play, LLC - All rights reserved. Drawings are not to scale unless otherwise specified.

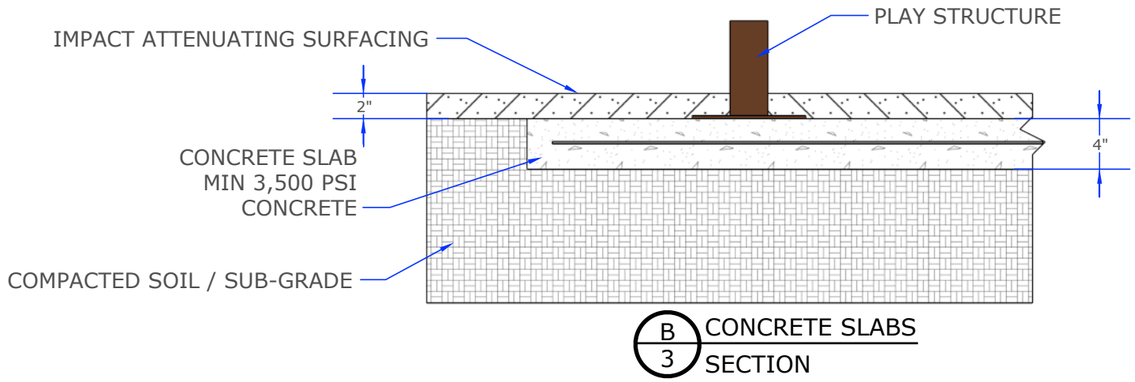

B/3 CONCRETE SLABS SECTION

4” thick concrete slab
typical (verify for local conditions).
MIN 3,500 PSI concrete with
6 x 6 wire mesh W2.9 x W2.9 W.W.F.
flat sheets, centered in the slab.
-OR-
Fiber reinforced concrete mix
equivalent in strength to
MIN 3,500 PSI concrete with
6 x 6 wire mesh W2.9 x W2.9 W.W.F.
flat sheets, centered in the slab.
(BY OTHERS)

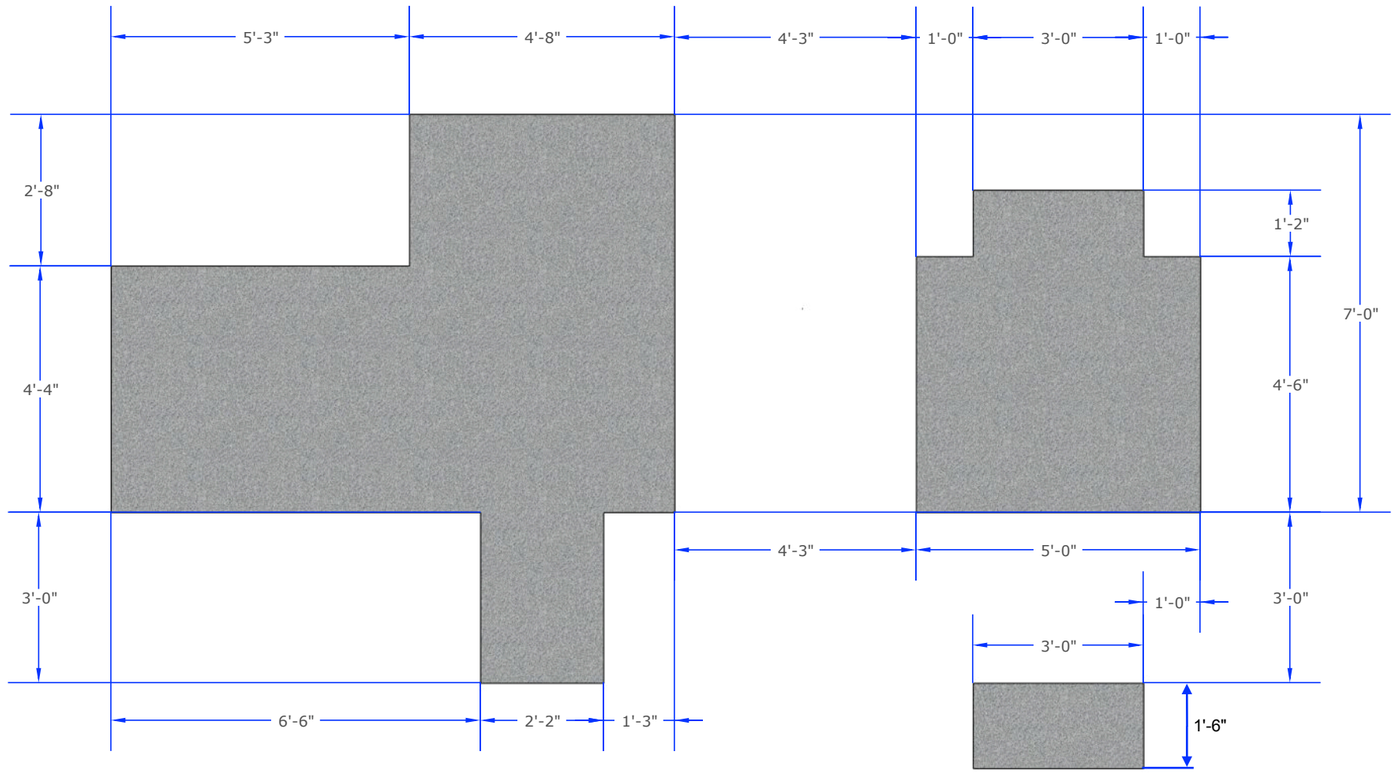

A/3 CONCRETE SLABS PLAN VIEW

Concrete Notes:

1- Concrete slabs shown in this document are recommendations based on historical performance in average soil conditions. Footing dimensions may be modified by owner based on actual soil conditions. Before changing slab dimensions, we strongly recommend the slabs be reviewed and approved by a registered engineer.

3- Assemble the entire play structure before anchoring it to the concrete unless instructed to do so in the individual play component.

All images and concepts are Copyright © 2025, Cre8Play, LLC - All rights reserved. Drawings are not to scale unless otherwise specified.